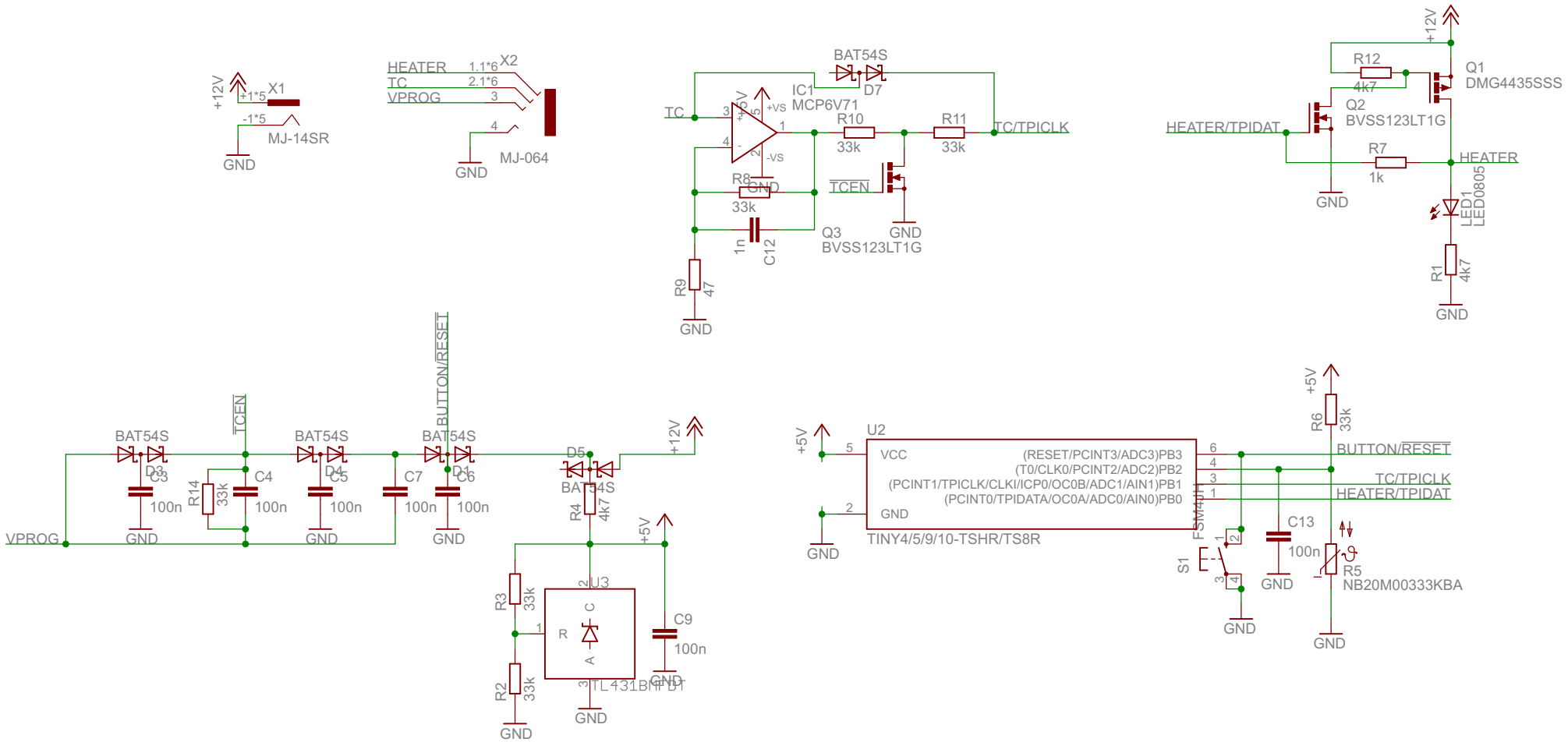

20-2-2019 13:11:56 V:\shock\www\pub\Soldering Iron\PCB\untitledv2.sch (Sheet: 1/1)